Navielektro
Working partnership in Vessel Traffic Systems

Radar Sensors for VTMS and
Coastal Surveillance Purposes

X-Band, NE-PRA3000 antenna

The PRA3000 series antenna is ideal for use in shore based traffic monitoring and surveillance systems. The antenna is designed to be a compact package with maximum gain. This has proven to be an ideal solution for gap filling purposes or medium range surveillance.

The antenna is built using COTS hardware, making it a very cost-effective solution. Navielektro has currently deployed the unit in question at locations in Finland, Norway and Sweden.

Antenna Specifications

Antenna and Transceiver:

- Frequency: 9350 ± 300 Mz
- Frequency: 8,9 Ghz version is available on request
- Horizontal beam width, -3db: 0,9°
- Vertical beam width, -3db: 3°
- Gain (nominal): 40dBi
- Polarization: Horizontal, vertical is available on request
- Side lobes level within -3degrees: < -28dB
- Side lobes level within -10degrees: < -35dB

- Rotational speed: 11-35 rpm
- Antenna weight: 248kg

Dimensions

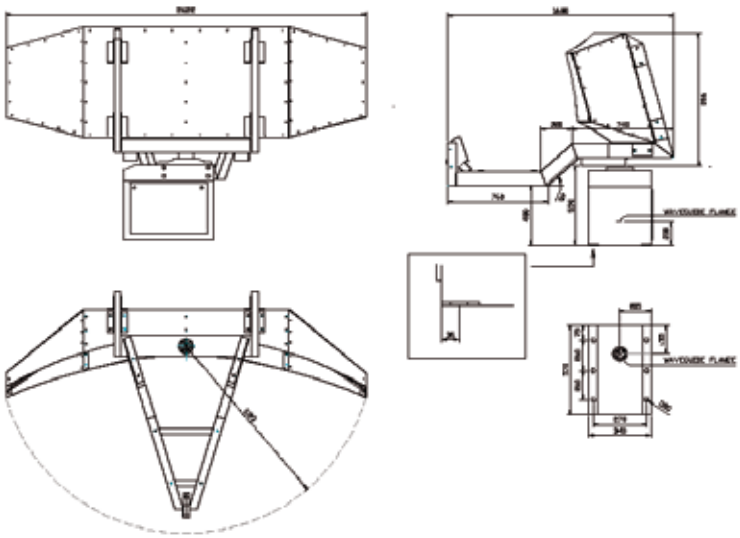

Copyright Navielektro 2008
Information contained in this description may be changed without further notice